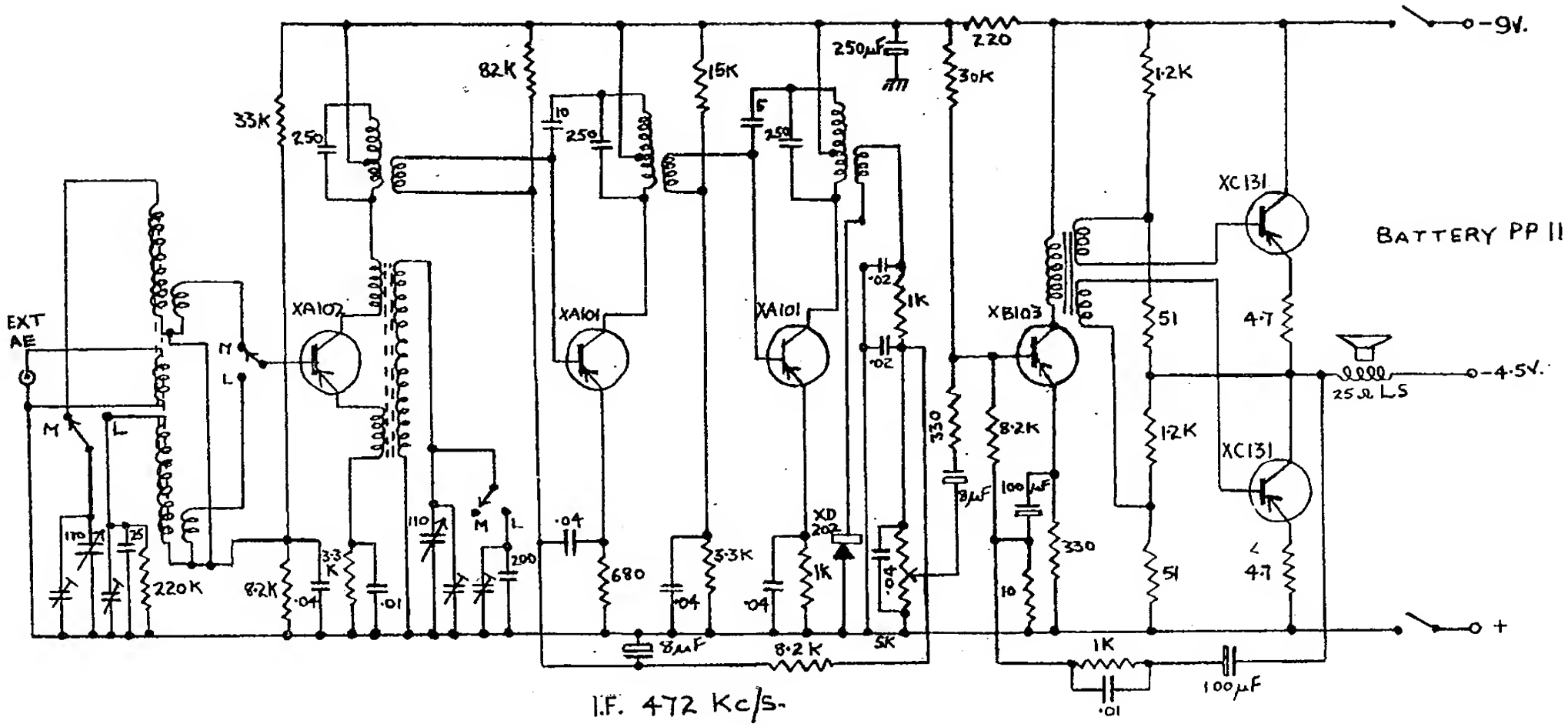

CIRCUIT DIAGRAM—ACE MODEL SUPER 6.2

ACE Model Super 6.2: Six-transistor, two-waveband (M.W./L.W.), portable receiver using 9-volt battery (PP11 or equivalent). Transistors: (X1) XA102; (X2) XA101; (X3) XA101; (X4) XB103; (X5, X6) XC131. Diode type XD202. I.F. 472 kc/s.